ROHL

Authentic Luxury for Kitchen and Bath™

www.rohlhome.com

Palladian 3-Hole Widespread Lavatory Faucet

ROHL Country Bath Collection

A1908LM

FEATURES

- Palladian metal levers
- 1/4-turn ceramic valves
- Solid brass
- 3 x 1 3/8" cutouts
- 5 3/4" spout reach
- 1/2" NPT connectors
- Pop-up extension kit available, order #C7324EXTKIT

COLORS/FINISHES

- Polished Chrome
- Polished Nickel
- Satin Nickel
- Tuscan Brass*
- Inca Brass
- Antico Brass

WARRANTY

- Limited Lifetime

* No warranty on Tuscan Brass Finish

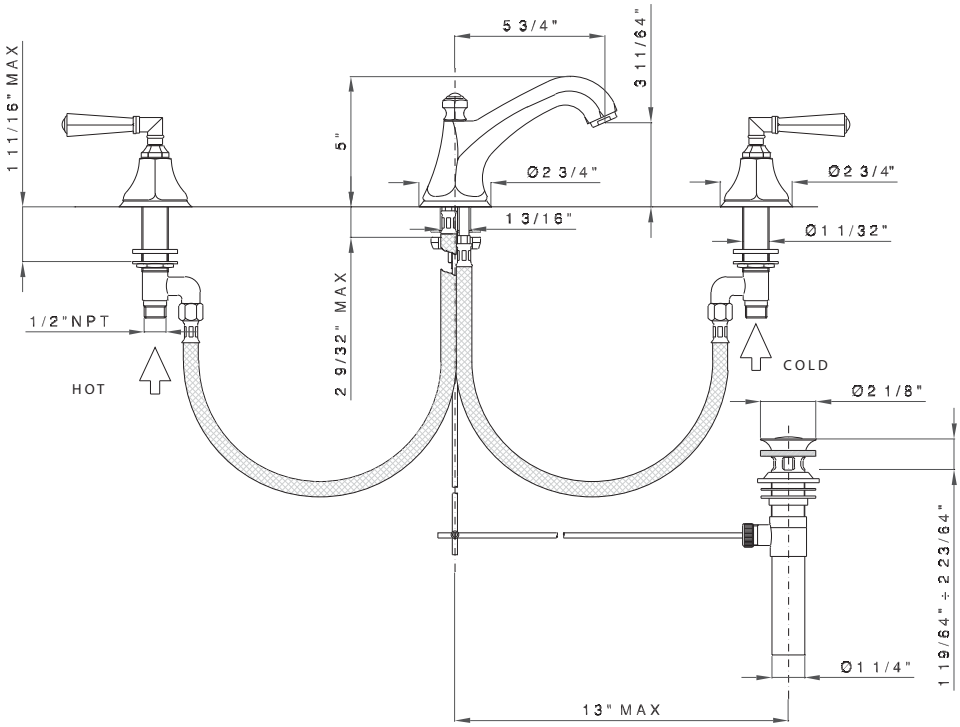

Consult your local ROHL showroom for additional information and specifications. For complete warranty details and a list of showrooms, go to www.rohlhome.com.

ROHL

Authentic Luxury for Kitchen and Bath™

www.rohlhome.com

A1908 Spare Parts

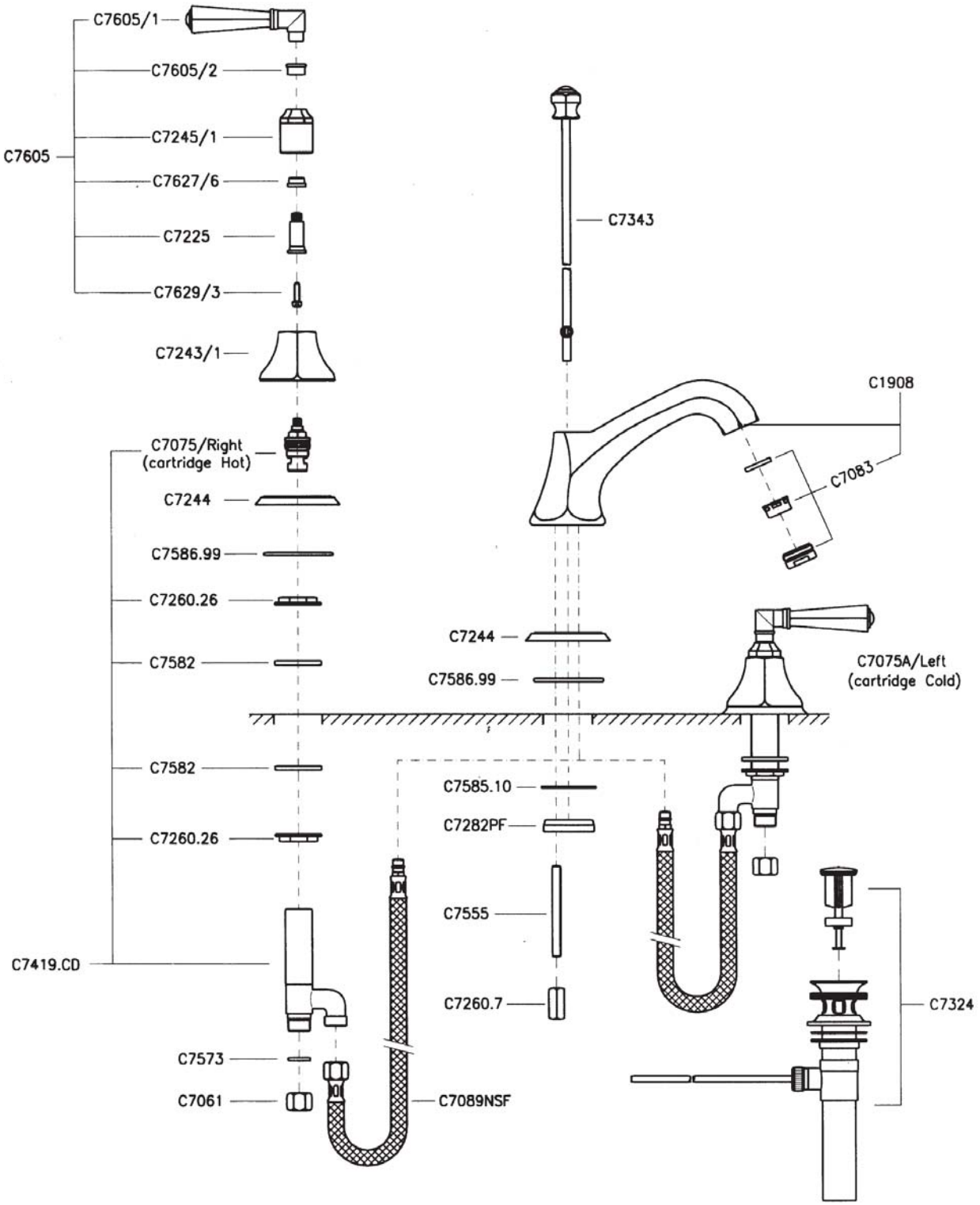

Consult your local ROHL showroom for additional information and specifications. For complete warranty details and a list of showrooms, go to www.rohlhome.com.